TARA Pillar tap cold water - Brushed Dark Platinum

17 500 892 Product version from 6/30/2009

- 100mm projection
- fixed spout
- circular, air-enriched flow
- height of mixer 115 mm
- height up to aerator 40 mm
- hole diameter 35 mm
- 1/2" connection
- rosette Ø 45 mm
- max. flow 7 l/min
- lead-free
- This product can help a building meet the requirements of Green Building Rating Systems, e.g. LEED®, BREEAM®, DGNB

Brushed Dark Platinum	17 500 892-99
Chrome	17 500 892-00
Brushed Platinum	17 500 892-06
Platinum	17 500 892-08
Dark Chrome	17 500 892-19
Brushed Durabrass (23kt Gold)	17 500 892-28
Matte Black	17 500 892-33
Brushed Bronze	17 500 892-42
Brushed Champagne (22kt Gold)	17 500 892-46
Champagne (22kt Gold)	17 500 892-47
Brushed Chrome	17 500 892-93

We reserve the right to change designs, product range and technical specifications without prior notice.
More information can be found at: www.dornbracht.com +49 (0) 2371 8899 900 mail@dornbracht.com

TARA Pillar tap cold water - Brushed Dark Platinum

17 500 892 Product version from 6/30/2009

mm [inches]

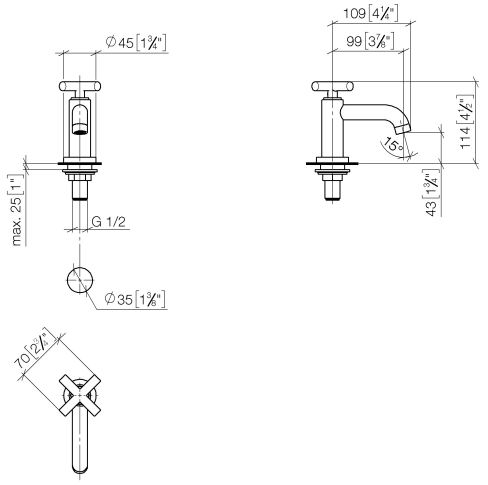

Flow rate chart

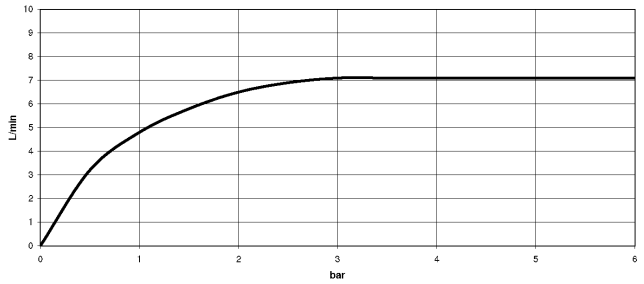

Codes & Standards

DIN 4109	ISO 3822	Ü-Zeichen

17 500 892 Product version from 6/30/2009

Certificates

LGA_18

TARA Pillar tap cold water - Brushed Dark Platinum

17 500 892 Product version from 6/30/2009

Parts for other finishes can be found here: Chrome

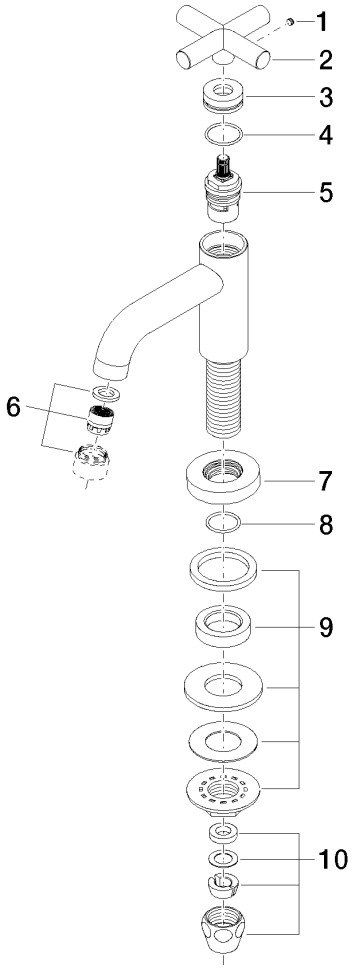

Spare parts list

No.	Item Number	Name	Quantity used	Delivery time
1	09 31 11 055 90	pin	1	2
2	09 20 89 011-99	handle	1	30
3	09 21 02 089-99	sleeve	1	30
4	09 14 10 085 90	seal	1	2
5	90 90 03 135 00 90	top	1	2
6	90 23 01 068 01-99	aerator	1	30
7	09 27 89 106-99	rosette	1	30
8	90 14 10 032 00 90	seal	1	2
9	04 23 10 010 88 90	fixing set	1	2
10	90 23 30 040 00-99	threaded connector	1	30

We reserve the right to change designs, product range and technical specifications without prior notice.
More information can be found at: www.dornbracht.com +49 (0) 2371 8899 900 mail@dornbracht.com